接口说明 Connection		
符号 Item	尺寸 Size	用途或名称 Service
I	Rc 3/8"	隔离液进口
O	Rc 3/8"	隔离液出口

注意：请严格依照I/O接口方向接管

Please mark the takeover according to the drawings

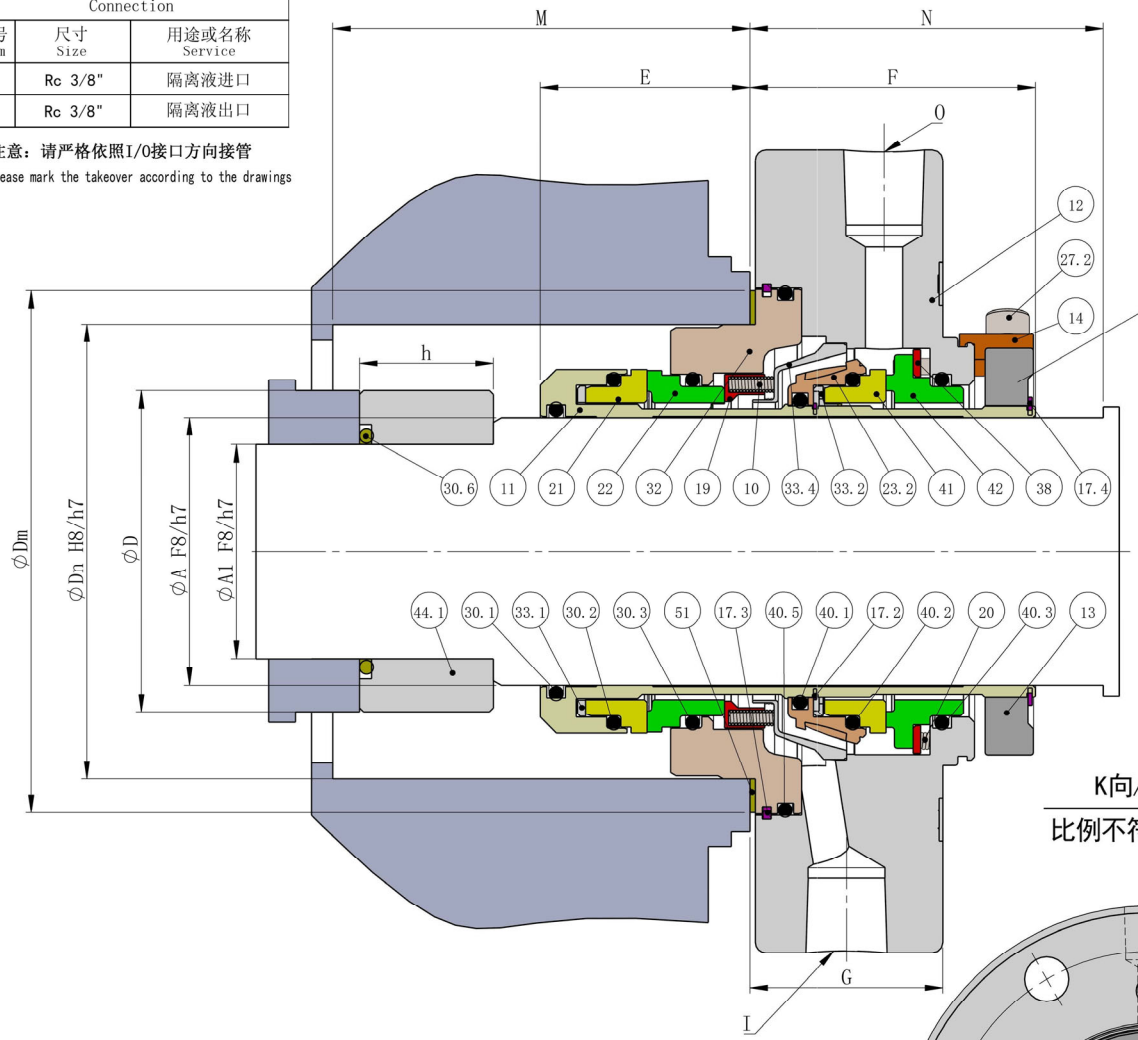

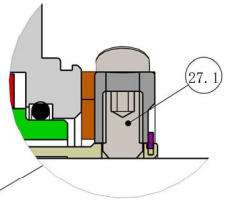

K向/View K

K向/View K

比例不符/NO SCALE

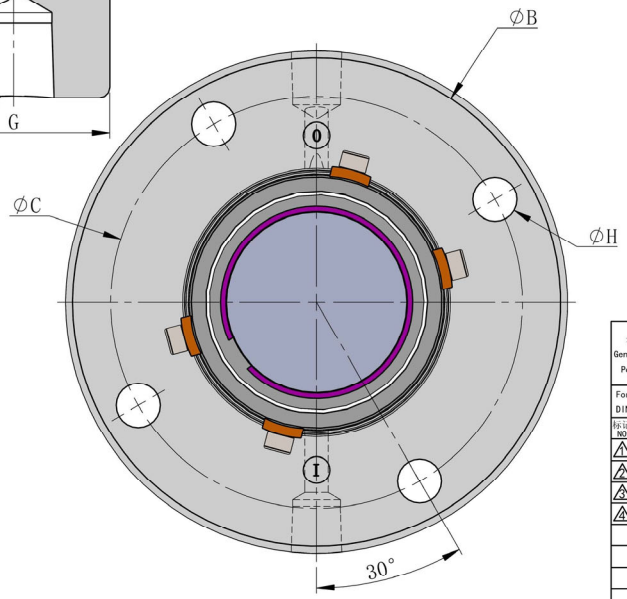

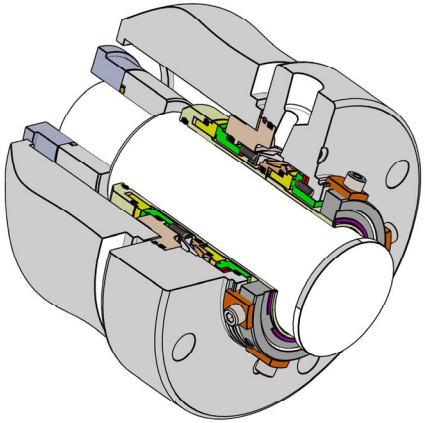

序号 NO.	名称 Name	材质 Material
11	轴套/Sleeve	316SS不锈钢/Stainless Steel
10	弹簧/Springs	Hast.C276
33.1	传动环/Drive Ring	316SS不锈钢/Stainless Steel
21	动环/Rotary Face	SSIC/TC
22	静环/Stat. Face	Carbon/SSIC/TC
32	副压盖/Gland Insert	316SS不锈钢/Stainless Steel
19	推环/Thrust Ring	316SS不锈钢/Stainless Steel
33.4	导流环/Deflector	316SS不锈钢/Stainless Steel
23.2	泵效环/Rotary Holder	316SS不锈钢/Stainless Steel
12	压盖/Gland	316SS不锈钢/Stainless Steel
41	二级静环/Stat. Face	SSIC/TC
42	二级动环/Rotary Face	Carbon/SSIC/TC
13	定位环/Clamp Ring	316SS不锈钢/Stainless Steel
27.1	紧定螺钉/Drive Screws	304SS不锈钢/Stainless Steel
30.1	O型圈/O-Ring	EPR/Viton/Aflas/Kalrez
30.2	O型圈/O-Ring	EPR/Viton/Aflas/Kalrez
20	弹簧/Springs	Hast.C276
40.3	O型圈/O-Ring	EPR/Viton/Aflas/Kalrez
17.2	卡簧/Circlip	304SS不锈钢/Stainless Steel
33.2	传动环/Drive Ring	316SS不锈钢/Stainless Steel
38	挡圈/Drive Ring	316SS不锈钢/Stainless Steel
17.4	卡簧/Circlip	304SS不锈钢/Stainless Steel
40.5	O型圈/O-Ring	EPR/Viton/Aflas/Kalrez
17.3	卡簧/Circlip	304SS不锈钢/Stainless Steel
51	垫片/Gasket	AF1
27.2	定位螺钉/Clip Screws	304SS不锈钢/Stainless Steel
14	定位块/Setting Clips	Cu/Brass
44.1	限位轴套/Limit sleeve	316SS不锈钢/Stainless Steel
30.6	O型圈/O-Ring	PTFE
40.1	O型圈/O-Ring	EPR/Viton/Aflas/Kalrez
40.2	O型圈/O-Ring	EPR/Viton/Aflas/Kalrez
30.3	O型圈/O-Ring	EPR/Viton/Aflas/Kalrez

GDMH系列 ISO2858-尺寸信息（mm）													
A	A1	B	C	D	Dn	Dm	E	F	G	H	M	N	h
30	23	115	95	40	60	72	39.2	53.3	33	12	64	64.5	20
40	30	125	105	50	70	87	39.2	53.3	33	12	64	76	20
50	40	148	125	60	85	97	39.2	53.3	36	14	78	66	25
60	45	158	135	70	95	115	40.1	54.4	36	14	78	107	25
80	65	198	170	90	122	143	50.6	70	40.5	18	100	102	30

未注公差按照 General tolerance Per ISO 2768-m	名义尺寸 [mm] Nominal dimensions	0.5-6	>6-30	>30-120	>120-400	>400-1000	>1000-2000
	公差 [mm] Tolerances	±0.1	±0.2	±0.3	±0.5	±0.8	±1.2

Format/图幅 DIN EN ISO 216 A3 | 第一视角 Projection Method 1 | 表面粗糙度表示方法符合 Method of indicating surface to ISO1302(μm) | 公差符合 Tolerances according to ISO 2768-m

标记 NO	处数 QTY.	描述 Description	日期 Date	姓名 Name
1				
2				
3				
4				

	日期 Date	姓名 Name
设计 Design		
校核 Checked		
审核 Approved		
公差带 Tolerance ISO 8015	比例 Scale 1:1	材料标记 Matrial Code

规格型号/TYPE NO. GDMH

机械密封

质量/Weight 4887.61 g

图号/Drawing NO.

版本: Rev. A